Vela Motor Company

Infrastructure Hardware Community Clean Tech Automotive

Changing the world by improving the fuel efficiency of traditional motors

VELAMOTORCOMPANY.COM BOUNTIFUL UTAH

The internal combustion engine was designed 140 years ago and is flawed. We're the first to rethink the position of the crankshaft, and have created and patented a motor that is more powerful and fuel efficient than any other motor on the Planet.

William Marsh Cofounder and CEO @ Vela Motor Company

Why you may want to support us...

1. Completed a successful test of a gas engine that improved fuel efficiency by more than 15%.
2. Patents issued in the U.S. and other countries.
3. We've bootstrapped a working prototype.
4. Conditional licensing agreement in place with Fiat for $200M once our testing cycle has been completed.
5. Received a $50,000 grant for testing from The Department of Energy.
6. Working with BYU to third party test the design

Our Team

AND OUR MAJOR ACCOMPLISHMENTS

William Marsh
Cofounder and CEO
I have owned and operated my own businesses for the past 20+ years and have worked with some of the most successful entrepreneurs from around the world. I am a husband and father and truly blessed.

Luis Velazquez
Cofounder and CTO
Over the past 40 years I have been on the cutting edge of design improvements in many different products from Electric Stoves, Water Heaters, CDs, Cameras and now the IC engine to change the world!

Pete Peralta
CFO
40+ years experience as a CPA and CFO, including business taxes and tax fillings (part-time).

Gabriel Velazquez
Engineer
Electrical engineer. Expert in testing, control & use of dynamo-meter for testing ICEs (part-time).

Ricardo Javier Segura
Patent Expert
Running the governmental patent department for 10+ years (part-time).

David Politis
CMO
Driven $1.1B in value through PR, investor relations, & marketing campaigns for clients (part-time).

Some of our investors

WE'VE RAISED $67,053 FROM 11+ INVESTORS SINCE OUR FOUNDING

Christopher Loren Jenks
Pediatric cardiac critical care medicine physician

Morris Gelman
cpa, mba, RETIRED, INNOVATIVE

Robert Jacques

Miguel Cruz

Troy Ochowicz

Roger M Bean

S. Lea Langdon

Jason Gerlach

Charles Reinwald

along with 2 other investors

Downloads

Vela Engine.gif
Vela Pitch Deck February 2018 .pdf
80 transcripts.txt

We've Designed a More Efficient Engine

Internal Combustion Engines (ICE) are the most common motor in the world, used in everything from cars to tractors to chainsaws. But despite their prevalence, we've been using the same basic ICE design for over 140 years. Essentially, the explosion that powers the engine happens when the piston is in the "top dead center" position, when the piston, connecting rod, and crankshaft are aligned. This causes significant energy to be transferred directly into metal components, to the point where the Department of Energy says only 15% of fuel energy goes toward actually moving the vehicle. Think about it like a bicycle: pushing on the pedal before it's in an optimal position is a waste of your energy.

At Vela, we've created what could be an industry-altering solution. Our patented design allows the crankshaft to rotate where energy from the explosion is best utilized, keeping the piston in optimal compressed position to increase efficiency.

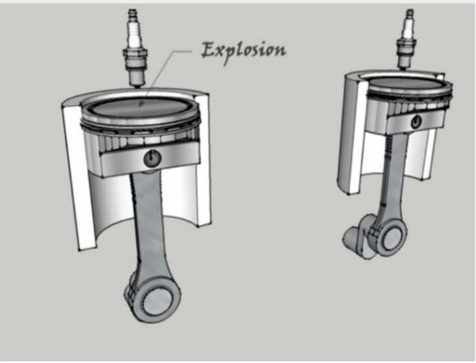

Traditional ICE: *The fuel/air mixture is ignited right before top-dead-center, losing valuable energy as the mixture ignites. About 85% of that energy is lost.*

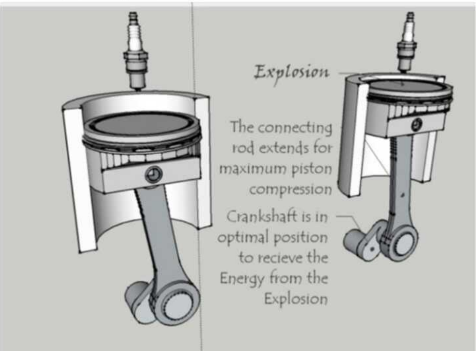
Explosion
The connecting rod extends for maximum piston compression
Crankshaft is in optimal position to recieve the Energy from the Explosion

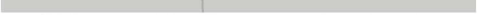

Vela ICE: *The fuel/air mixture is ignited while in its fully compressed position -- after top-dead-center -- when ignited, allowing the full use of energy produced and requiring less fuel.*

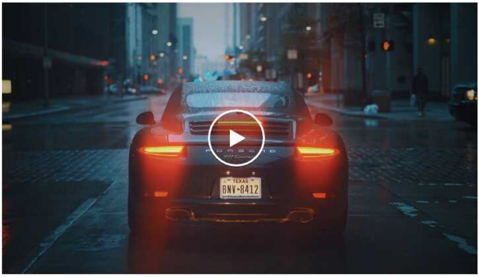

Our Market is Enormous

Besides safety, the No. 1 concern for ICE manufacturers in today's market is to lower carbon emissions, true for combustion engines large, small, and in-between. Our vision is to reduce 10% of the amount of carbon emission released into the atmosphere by a typical ICE's, which could equate to a savings of more than 1 billion tons of CO2. So, ICE manufacturers are our direct clients. We'll license the design to them so that they can continue to produce ever-improving machines, working together to make our world better while fossil fuels are still around. In fact, we already have a conditional licensing agreement in place with Fiat for $200M once our testing cycle has been completed.

90 Million

Automobiles produced each year globally

132 Million

Motorcycles produced each year globally

30 Million

Generators, lawn mowers, etc., produced each year

250 Million

ICE's manufactured globally every year

Our Progress So Far

We've bootstrapped the design of our working prototype and have verbal commitments from places like Fiat, but we need additional funding in order to complete third-party testing to ensure trust and functionality with potential clients. Once those testings are complete, we'll be able to begin licensing and manufacturing deals. We're also looking to patent the design in additional countries and bring on licensing contracts for fast growth and profitability.

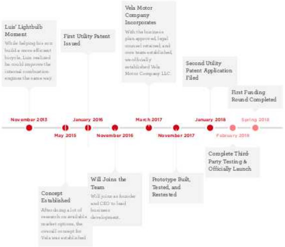

November 2013

Luis' Lightbulb Moment

While helping his son build a more efficient bicycle, Luis realized he could improve the internal combustion engines the same way.

May 2015

Concept Established

After doing a lot of research on available market options, the overall concept for Vela was established.

January 2016

First Utility Patent Issued

November 2016

Will Joins the Team

Will joins as founder and CEO to lead business development.

March 2017

Vela Motor Company Incorporates

With the business plan approved, legal counsel retained, and core team established, we officially established Vela Motor Company LLC.

November 2017

Prototype Built, Tested, and Retested

January 2018

Second Utility Patent Application Filed

February 2018

Complete Third-Party Testing & Officially Launch

Spring 2018

First Funding Round Completed

Check Out Our Pitch Deck

Vela Motor Company

Making the world a better place one engine at a time.

William Marsh CEO - Salt Lake City UT

Vela Motor Company
Problem/Opportunity
Solution
Design Prototype
Underlying Magic

Let's Change Engines Together

Dear Potential Investors,

"Are you kidding me? Who wouldn't want to be part of changing the world?" That was my reaction when Luis first approached me about his incredible idea. The day prior, I had consulted with him on the status of the business side of the project -- he couldn't answer any of my business-related questions. The technology is amazing, hands down and without question, but I told him without a business, a business plan, a strategy, a great team, and funding, he wasn't going anywhere.

The next day he called me back, invited me to be his partner, and lead the business-side of Vela. I had to think about it for about … two seconds before accepting. He thought we would make a great team: we are both dreamers, geniuses, and love to work hard. With his mechanical expertise and my 20+ years of business expertise, we are a perfect match.

I wondered how in the world a simple extendable connecting rod could be a game-changing technology. Of course, once I understood the principle behind what it actually does, it became a no-brainer. If you think about it, even for one moment, you will realize without a doubt that our technology will change the world. Our technology will be in every internal combustion engine – there isn't another option for manufacturers.

So out of all the investment opportunities out there, which businesses can honestly say they can change the entire WORLD? We can. Think of this: if we can improve fuel efficiency by only ten percent, that is a 10% savings to families on their fuel bill, but more importantly, a 10% reduction in carbon dioxide emissions, equaling 1 billion tons every year! What's more, we believe we can do far better than ten percent.

Join us, grow with us, and let's change the world together!

Sincerely,

William Marsh

CEO and Cofounder of Vela Motor Company

Investor Q&A

– COLLAPSE ALL

What does your company do?

The internal combustion engine was designed 140 years ago and is flawed. We're the first to rethink the position of the crankshaft, and have created and patented a motor that is more powerful and fuel efficient than any other motor on the Planet.

Where will your company be in 5 years?

We've spent years testing and designing our prototype. Now we're raising money to fund the third-party tests required for production. Fiat has already expressed interest in our patented motor. Replacing even a fraction of the 250 million combustion engines produced each year would be a massive business.

What is Vela Motor Company developing?

We are working on a disruptive technology for the internal combustion engine that will significantly improve the fuel efficiency of engines to a degree that basically has never been seen before, simply by adjusting a few items in the combustion chamber of the engine.

Most of the world's engines are combustion engines. The main components are the pistons, the connecting rod, and the crankshaft, and those have essentially never changed. Some things have been toyed around with, like the timing, the fuel-air mixtures, and direct injections, but the actual mechanism that transforms the energy from the explosion -- the fuel-air mixture explosion into energy that drives the engine -- has not changed in 140 years.

We can almost compare that process to a bicycle. You have a pedal. Then you've got the connecting shaft from your pedal down to the crankshaft, which holds the sprocket, which turns the chain, which turns your tire. So if you push down on that pedal too soon, a lot of the energy you're using to push down does not get transferred into moving the bike forward. It just gets driven into the mechanical component of the bike itself.

The same thing happens in the internal combustion engine. The explosion happens when the piston, the connecting rod, and crankshaft are all in line with one another, a setup called "top dead center." First, the compression is at its peak, so it creates the maximum amount of energy. As the gas expands, it pushes the piston and the connecting rod down, which moves the crankshaft. But about 85% of the energy from the explosion is actually lost through heat, mainly as friction, because all of the energy is going directly into that connecting rod,piston and crankshaft. Nobody has been able to figure out a way to combine the high compression rate with the crankshaft being in the correct position to receive that energy, and so the combustion engine has stayed essentially the same for the past 140 years.

Vela Motor Company's technology uses an extendable connecting rod, which allows for the piston to maintain its compressed position while allowing the crankshaft to rotate to an optimal position to receive energy from the explosion. That significantly improves fuel efficiency, and the engine's efficiency overall, because it's able to accept that energy in an immediate usable form. The explosion actually happens right before top dead center, in the way engines work now, and we allow the spark to happen as far past top dead center as manufacturers want to go. Thirty degrees seems to be the optimal position to really receive the energy at its peak. We're pushing on a rotation instead of straight down.

How did Vela Motor Company come up with this innovation? ⌄

We had the exact same question. My partner, who's the inventor, was working on a bicycle innovation for his son who runs triathlons. He broke down a bicycle and figured out how to make it go about 30% faster while utilizing the same amount of energy. They built the prototype but realized that wouldn't really be fair to other competitors, so they decided not to do anything with it.

Then a couple years later, he was helping a family member in his garage with a car. He started wondering, "Could that same design flaw exist in the internal combustion engine?" And so he broke down the engine, looked at it and said, "Yeah. Yeah, it really does." He immediately started looking at patents to see what was out there, what current manufacturers were doing. After about a year of research, he realized nobody has done what he was thinking about doing. He was absolutely blown away by that.

He immediately found someone with patent expertise and began working with them, and we now have a patent on this technology. When I joined the team, I couldn't understand why no one had done this before. But when something like the combustion engine has been around for a long time, sometimes people tinker around the edges, but few think about what could be done with the main components of the engine. It's kind of a group-think mentality, where people assume change is impossible. We looked at things in just the right way to come up with this.

How successful is your prototype? ⌄

We have a prototype for a generator that we're currently testing. It has surpassed all of our expectations by quite a bit. We originally thought we could improve fuel efficiency by about 10%, but we're realizing that's not even close, it's actually going to be much better than that. We're not going to put numbers to that until we've validated it with third-party testing, which we hope to finish very soon. We hope to launch in early 2018. We've spoken to some people at Fiat and they are very interested in having us build our prototype in one of their vehicles. We don't want to go after manufacturers until we get the third party testing done. At that point, we'll release all the testing and explain exactly what we do through a press conference.

What do you need to accomplish in the next six months? ⌄

First, we need to get that third party testing done to really solidify what those numbers are going be, not just what we have seen them to be. That will give us a good solid baseline to go from that people can trust.

We also need to build out the prototype in a vehicle. We've already spoken with Fiat, and after third-party testing is complete, will look at a contract with them to build out a prototype in a vehicle of theirs and test it and let them test it. Then, we want to get the word out to the world. We anticipate that since this is such a disruptive technology, it will get a lot of attention from both manufacturers and the public in general, as well as from people that care about the environment, since this could significantly cut down on emissions.

What concerns do you have about next steps? ⌄

Our biggest concern is that people won't take us seriously. Model Ts got 22 miles to the gallon. Cars today, 100 years later, get slightly better than that. So how can this little nobody company suggest that we could disrupt an entire industry? The reality is, it's pretty unbelievable. That's why we're so focused on third-party testing by reputable places. We've contacted the Department of Energy, the National Laboratory, and the Pacific Northwest Laboratory in Washington, who are ready to run tests on it. Brigham Young University (BYU) is going to be testing it as well. We need third-party testing with gravity to confirm that this is for real.

Our next concern is two-fold. We think the automobile industry will try to hold us up in litigation, either by saying that this is not possible, or that we've been thinking about doing this for a long time but just haven't patented it. To mitigate that, we've already talked to some high-profile law firms to find one that would be best able to represent us. We've secured a firm called Ballard Spahr, which represented Apple in the copyright infringement suit against Samsung.

We're also concerned that if we just talk to one manufacturer at a time, that they're going to try to be exclusive with the technology. It might be great for that manufacturer, but our goal is not to be exclusive. We want to have the technology in the hands of all manufacturers as quickly as possible.

Finally, there's funding. We could keep plugging along with a shoestring budget, but having the proper funds in place would allow us to really have the setup we need. We anticipate that manufacturers are going to want to have us build out a prototype -- vehicle, motorcycle, lawnmower, whatever the engine is, they're going to want us to build a prototype in their engine and test it before they're willing to give us any sort of contract. We're going to need facilities, working capital and staff to be able to do that.

How do you plan to approach production?

The simplicity of the design is a strength of ours, and we plan on licensing the technology so manufacturers can incorporate that design directly into their engines. We manufacture the components. They change the timing and they adjust the fuel. We're going to leave a lot of it up to the manufacturers, although we will be intimately involved in helping them with the design and making sure it's running correctly.

So if its Briggs & Stratton, or Honda, or whoever, they would manufacture their own components and build the engines themselves like they do now. It really is only a few minor changes. They have to have the connecting rod that our design calls for and then a few other small pieces that are fairly inexpensive for the engine, and then adjust timing and fuel components. They will make those adjustments from one facility to the next.

What makes you feel equipped to navigate the auto industry?

Our ace in the whole is Yuri Hovansky, a Ph.D. in mechanical engineering who worked for the National Laboratory for most of his career. He already has the inside track to most of these manufacturers. He's worked directly with their design teams and decision-making teams, and he actually has a product in most engines right now, so he knows how to navigate those waters. If we can prove what we say we can do, he's very confident we can get this into the manufacturers.

Yuri knows it is notoriously difficult, and it will take years and years and years, to actually get the component into the working engine. We don't expect that auto companies are going to incorporate this over the next 6 to 12 months. So his suggestion was that we focus initially on smaller manufacturers, like Briggs & Stratton, who do lawnmowers and chainsaws. They don't have to deal with as many regulations as automobile manufacturers do.

Who are your competitors?

Liquid Piston is a company in a similar space, but I don't see them as a direct competitor. They're asking manufacturers to completely change their engine platform from a piston setup to a rotary setup, which most manufacturers have tested and decided they weren't good fits. We don't really see them as penetrating the market like we potentially can, just because their model requires manufacturers to scrap their current engine designs for completely new engines. That might make some sense in some cases, potentially in airplanes, but most auto manufacturers are not going to scrap their current engine designs unless they go all-electric. They wouldn't do it for another internal combustion engine.All manufactures are looking for efficiency improvements. As of right now they do not have anything that would be direct competition. That doesn't mean that another innovation couldn't come along and compete with what we are doing. They just can't do anything similar to what we are doing.

What does your patent cover?

On a simple level, it covers any compression that moves the crankshaft forward after top dead center, whether that's caused by an explosion or other sorts of compression. We have some other designs that we're looking at that use other ways to create that compression, like expandable gasses. A manufacturer couldn't go out and create anything similar to what we're doing because it would be covered under that compression after top dead center. We've talked with our attorneys at Ballard Spahr about it, and they are confident that we could defend ourselves against any threats.

Why does this matter to car buyers?

If testing goes as well as we think it will, we're talking about potentially doubling the fuel efficiency of vehicles. That means either you have more power with the same fuel consumption, or you have better fuel efficiency. And for manufacturers, we've started tinkering around with the design that will allow you to switch between those two in the same engine.

You can start to imagine that an engine, say a v8, 350-cubic-centimeter engine that is fairly typical in automobiles, might be able to replace the engine that's in a tractor-trailer. You could have a much smaller engine that can produce significantly more power. Or, on the other end of that, you have your car that now gets 15 miles to the gallon which could potentially get 25 to 30 miles to the gallon. That's potentially huge savings. Also, most people are getting more and more concerned about their environmental footprints. So if you could even save 10%, that's literally a billion cubic tons of CO2 that we could remove from the atmosphere. If we can do what we really think we can do, we're talking significantly more than that. We've got some really interesting benefits for consumers that manufacturers will not be able to ignore.

How much money will it take to bring this product to market? ˅

For our best case scenario, which would include facilities to build and test our engines, and a small team we would need about $1.5 million to cover about 18 months. If it takes us longer than anticipated, or if we get into litigation, we're talking about a lot more money. But we're hoping to get by on $1.5 million. And we've already actually got a commitment from a local government that is very interested in what we're doing. If we're providing jobs to the local community and we've got other investment capital, they're willing to give us about $500,000 in a loan or similar situation. We're hoping to raise about $1 million from Wefunder to help us get to that point. If later on down the road it looks like it's going to take a little longer, we'll look a second round or third round of funding.

How does your engine work? ˅

The difference with how our engine works from a conventional engine is in allowing the crankshaft to be in the best position to receive the energy from the explosion, while at the same time, keeping the high compression rate for maximum power. It may seem like a very small difference but that difference is significant.A simple experiment that anyone can do at home, to show the power difference, is to find a bicycle and a bathroom scale. Place the bathroom scale up against a sturdy wall, preferably a block wall, pinched against the wall by the front tire of the bike. Place the pedal 5 degrees past top dead center and see what the scale reads. Next place the pedal at 30 degrees past top dead center and see what the scale reads. You will notice that the scale will read about a 4 times greater difference when the pedal is at 30 degrees. So what does that mean? Simply put with the same amount of downward force you are delivering 4 times the amount of energy to turning the wheels.

How are you going to beat Tesla? ˅

Interesting question. We are not looking to beat Tesla or cause the downfall of electric vehicles. In fact we have very similar goals to reduce environmental impact. Honestly, we hope for all of our sakes that they succeed.
The numbers: About 1% of all vehicles manufactured are electric and it will take decades for them to take over the market. Again we hope that they do. By the time that they have a solid foothold on the market our patents will have expired.
The reality is that even if everyone wanted to buy an electric car today they couldn't for the simple fact that there isn't enough energy produced to support that many cars. There isn't the battery capacity to produce that many cars. The other side of this is where does the energy come from to recharge? 93% comes from non renewable sources. Hydroelectric is not a renewable resource as it is one of the most contaminating sources, as it alters entire ecosystems and releases tremendous amounts of methane gas. Until energy truly comes from renewable resources then electric cars are not living up to the promise of a cleaner environment.
Our Plan: Once we have market penetration with our technology then our next priority is to work on boosting renewable energy, which will actually help the electric cars to live up to the hype. We have some game changing ideas on how to do that as well.
Just to clarify we are not getting into the manufacturing business. We are not going to produce cars or compete with any manufacturer. We are looking to license our technology to all internal combustion engine (ICE) manufactures. So to expand on that further there are about 90 million vehicles produced annually but there are 250 million internal combustion engines produced.
Even if electric cars took over the entire market there are 160 million internal combustion engines still being produced. The bottom line is that the ICE isn't going anywhere anytime soon. We have the technology to change all ICE's for good and live up to the promise of a cleaner environment.

Financials

Vela Motor Company has financial statements ending December 31 2019. Our cash in hand is $100, as of March 2020. Over the three months prior, revenues averaged $0/month, cost of goods sold has averaged $0/month, and operational expenses have averaged $0/month.

At a Glance

January 1 to December 31

$0	$0	$0
Revenue	Net Profit	Short Term Debt

$0	$100
Raised in 2019	Cash on Hand As of 03/13/20

INCOME BALANCE NARRATIVE

Management's Discussion and Analysis of Financial Condition and Results of Operations

You should read the following discussion and analysis of our financial condition and results of operations together with our financial statements and the related notes and other financial information included elsewhere in this offering. Some of the information contained in this discussion and analysis, including information regarding the strategy and plans for our business, includes forward-looking statements that involve risks and uncertainties. You should review the "Risk Factors" section for a discussion of important factors that could cause actual results to differ materially from the results described in or implied by the forward-looking statements contained in the following discussion and analysis.

Overview

The internal combustion engine was designed 140 years ago and is flawed. We're the first to rethink the position of the crankshaft, and have created and patented a motor that is more powerful and fuel efficient than any other motor on the Planet.

We've spent years testing and designing our prototype. Now we're raising money to fund the third-party tests required for production. Fiat has already expressed interest in our patented motor. Replacing even a fraction of the 250 million combustion engines produced each year would be a massive business.

Given the Company's limited operating history, the Company cannot reliably estimate how much revenue it will receive in the future, if any.

Milestones

Vela Motor Company LLC was incorporated in the State of Utah in November 2016.

Since then, we have:

- Completed a successful test of a gas engine that improved fuel efficiency by more than 15%.
- Patents issued in the U.S. and other countries.
- We've bootstrapped a working prototype.
- Conditional licensing agreement in place with Fiat for $200M once our testing cycle has been completed.
- Received a $50,000 grant for testing from The Department of Energy.

- Working with BYU to third party test the design

Historical Results of Operations

Our company was organized in November 2016 and has limited operations upon which prospective investors may base an evaluation of its performance.

- *Revenues & Gross Margin.* For the period ended December 31, 2019, the Company had revenues of $0 compared to the year ended December 31, 2018, when the Company had revenues of $0. Our gross margin was % in fiscal year 2019, compared to % in 2018.
- *Assets.* As of December 31, 2019, the Company had total assets of $0, including $0 in cash. As of December 31, 2018, the Company had $0 in total assets, including $0 in cash.
- *Net Income.* The Company has had net income of $0 and net income of $0 for the fiscal years ended December 31, 2019 and December 31, 2018, respectively.
- *Liabilities.* The Company's liabilities totaled $0 for the fiscal year ended December 31, 2019 and $0 for the fiscal year ended December 31, 2018.

Liquidity & Capital Resources

To-date, the company has been financed with $50,000 in equity.

After the conclusion of this Offering, should we hit our minimum funding target, our projected runway is 3 months before we need to raise further capital.

We plan to use the proceeds as set forth in this Form C under "Use of Funds". We don't have any other sources of capital in the immediate future.

We will likely require additional financing in excess of the proceeds from the Offering in order to perform operations over the lifetime of the Company. We plan to raise capital in 1 months. Except as otherwise described in this Form C, we do not have additional sources of capital other than the proceeds from the offering. Because of the complexities and uncertainties in establishing a new business strategy, it is not possible to adequately project whether the proceeds of this offering will be sufficient to enable us to implement our strategy. This complexity and uncertainty will be increased if less than the maximum amount of securities offered in this offering is sold. The Company intends to raise additional capital in the future from investors. Although capital may be available for early-stage companies, there is no guarantee that the Company will receive any investments from investors.

Runway & Short/Mid Term Expenses

Vela Motor Company LLC cash in hand is $100, as of January 2020. Over the last three months, revenues have averaged $0/month, cost of goods sold has averaged $0/month, and operational expenses have averaged $0/month, for an average burn rate of $0 per month. Our intent is to be profitable in 12 months.

At this point nothing has changed since our financials we reviewed. Until we have more investment capital we don't anticipate any major changes.

Over the next 3-6 months we don't anticipate any revenues from licensing agreements although there is a possibility of an initial fee to license our patent. We do expect a large amount of expenses to get the company up and running including additional patent work, working capital, office and warehouse space, sales and marketing, etc. The funds to cover those expenses will come from investment capital initially.

A note from Wefunder. Unlike companies on the NASDAQ, early-stage startups have little operating history. Financial analysis is not as useful when there is limited data. It's more important to predict the size of the future market. If the founder achieves their vision, will enough customers pay the company enough money?

It's also common for fast-growing startups to lose money even faster: they are investing in future growth. In these cases, it's often better to check if the Cost of User Acquisition (CAC) is lower than the Lifetime Value (LTV) of that customer. If one spends $1000 today to make $10,000 over the next five years, that may be a smart bet. Amazon is a famous example of re-investing potential profits to maximize growth over 20 years.

Net Margin:	**Gross Margin:**	**Return on Assets:**
N/A	N/A	N/A
Earnings per Share:	**Revenue per Employee:**	**Cash to Assets:**
$0.00	$0	N/A

Revenue to Receivables:	**Debt Ratio:**
~	N/A

2019 Vela Financials.pdf

Vela Motor Company Financial Statements- Reviewed.pdf

Risks

1. The Company is an early stage company. Accordingly, the Company's operations are subject to all the risks inherent in the establishment of a new business enterprise, including potential operating losses. Any investment in the Company must be considered in light of the risks, expenses and difficulties frequently encountered by companies in an early stage of development in new and rapidly evolving markets. These risks include the Company's substantial dependence on acceptance into a highly competitive marketplace surrounded by better funded and more established companies, our need to conduct product development, and our need to expand our sales and support organizations, respond to competition, manage changing operations, develop strategic relationships, control costs and expenses, maintain and enhance our brand, expand our product and service offerings, improve function and benefits, attract, integrate, retain and motivate qualified personnel, and rely upon acceptance and growth in our targeted markets. In addition to being subject to all of the risks associated with the creation of a new business, the Company will be subject to factors affecting business generally, such as general economic conditions, increasing government regulatory activity, scarcity of environmental resources, and competition. The Company believes that the estimates prepared by them as to capital, personnel, equipment and facilities required for their operations are reasonable, but until their operations... more

2. The Company has made certain assumptions about the internal combustion engine marketplace in order to create financial projections for the business. There is risk associated with the accuracy of these projections due to continuous changes in technology, new feature introductions by competitors, changes in user preferences and shifts in user demographics. In order to mitigate this risk, the Company has taken great care to ensure the reliability and source quality of key assumptions used in the business plan. The company diligently researches publicly-available information and initiatives of competitors. changes in the marketplace and changes in user preferences. We pride ourselves on being innovative and ahead of the curve whenever possible.

3. The Company currently intends to retain any future earnings and does not expect to make any distributions in the foreseeable future. The Securities provide for no repayment of principal or interest amounts until the Maturity Date (as defined in the SAFE Agreement). Investors who anticipate the need for distributions from their investment in the Company should not purchase the Securities offered hereby. The Company is a mission driven business that is focused on providing a product that is both cost-effective and environmentally-friendly. As a result, the Company may make decisions based on considerations other than strictly maximizing short-term profit and may initially result in high operating costs. Additionally, the Company is committed to donating up to 10% of its net profit to charities. These decisions will likely reduce the amount of revenue available to the Company to operate and grow, and ultimately to return to investors, which may further increase the riskiness of the investment and potential loss of any investment.

4. The Company might not sell enough securities in this offering to meet its operating needs and fulfill its plans, in which case the Company might need to reduce sales & marketing, engineering, or other expenses. Were recurring revenue to decrease, further cuts would be needed and hurt the Company's ability to meet its goals. Even if the Company raises the entire round successfully, we may need to raise more capital in the future in order to continue. Even if we do make successful offering(s) in the future, the terms of that offering might result in your investment

in the company being worth less because of the terms of future investment rounds.

5 We rely on intellectual property rights, an issued patent and an pending patent, in order to operate our business.

Our intellectual property rights, including multiple patents, may not be sufficiently broad or otherwise may not provide us a significant competitive advantage. In addition, the steps that we have taken to maintain and protect our intellectual property may not prevent it from being challenged, invalidated, circumvented or designed-around, particularly in countries where intellectual property rights are not highly developed or protected. In some circumstances, enforcement may not be available to us because an infringer has a dominant intellectual property position or for other business reasons. Any failure by the Company to obtain or maintain intellectual property rights that convey competitive advantage, adequately protect our intellectual property or detect or prevent circumvention or unauthorized use of such property, could adversely impact our competitive position and results of operations. We also rely on nondisclosure and noncompetition agreements with vendors, consultants and other parties to protect, in part, trade secrets and other proprietary rights. There can be no assurance that these agreements will adequately protect our trade secrets and other proprietary rights and will not be breached, that we will have adequate remedies for any breach, that others will not independently develop substantially equivalent proprietary information or that third... more

6 We may be subject to future governmental regulations. Aspects of our business and our products may be regulated at the local, state, and federal levels from potentially all nations. Our product may be subject to state, local and Federal environmental laws and regulations, especially those relating to the air quality and environmental concerns. The nature and scope of future legislation, regulations and programs cannot be predicted. While we anticipate that we and our product will be in compliance with all applicable governmental regulations, there still may be risks that such laws and regulations may change with respect to present or future operations. Such additional costs would increase the cost of investments and operations and decrease the demand for products and services. We and our products will be ultimately responsible for compliance with such regulations and for obtaining and maintaining all required permits and licenses. Such compliance may be time consuming and costly, and such expenses may materially affect our future ability to break even or generate profits.

7 The success of the Company will depend on its ability to compete for and retain additional qualified key personnel to enhance the growth. The Company's business would be adversely affected if it were unable to recruit qualified personnel when necessary or if it were to lose the services of certain key personnel and it were unable to locate suitable replacements in a timely manner. Finding and hiring such replacements, if any, could be costly and might require the Company to grant equity awards or incentive compensation, which could have a material adverse effect on the Company's financial results and on your investment. The loss, through untimely death, unwillingness to continue or otherwise, of any such persons could have a materially adverse effect on the Company and its business.

8 The SAFE (Simple Agreement for Future Equity) will not be freely tradable until one year from the initial purchase date.

Although the SAFE may be tradeable under federal securities law, state securities regulations may apply and each Purchaser should consult with his or her attorney. You should be aware of the long-term nature of this investment. There is not now and likely will not be a public market for the SAFE (Simple Agreement for Future Equity). Because the SAFE has not been registered under the Securities Act or under the securities laws of any state or non-United States jurisdiction, the SAFE has transfer restrictions and cannot be resold in the United States except pursuant to Rule 501 of Regulation CF. It is not currently contemplated that registration under the Securities Act or other securities laws will be affected. Limitations on the transfer of the SAFE may also adversely affect the price that you might be able to obtain for the SAFE in a private sale. Purchasers should be aware of the long-term nature of their investment in the Company. Each Purchaser in this Offering will be required to represent that it is purchasing the Securities for its own account, for investment purposes and not with a view to resale or distribution thereof.

9 The Company may never receive a future equity financing or elect to convert the Securities upon such future financing. In addition, the Company may never undergo a liquidity event such as a sale of the Company or an IPO. If neither the conversion of the Securities nor a liquidity event occurs, the Purchasers could be left holding the Securities in perpetuity. The Securities have numerous transfer restrictions and will likely be highly illiquid, with no secondary market on which to sell them. The Securities are not equity interests, have no ownership rights, have no rights to the Company's assets or profits and have no voting rights or ability to direct the Company or its actions.

Details

The Board of Directors

DIRECTOR	OCCUPATION	JOINED
William Marsh	CEO @ Vela Motor Company	2016
Luis Velazquez	CTO @ Vela Motor Company	2016

Officers

OFFICER	TITLE	JOINED
William Marsh	Cofounder	2016
Luis Velazquez	Cofounder and Lead Design	2016

Voting Power

HOLDER	SECURITIES HELD	VOTING POWER
William Marsh	200,000 Profits Interest Units	20.0%
Luis Velazquez	660,000 Common Units	66.0%

Past Equity Fundraises

DATE	AMOUNT	SECURITY
10/2018	$17,053	SAFE
03/2016	$50,000	Priced Round

Outstanding Debts

None.

Related Party Transactions

None.

Use of Funds

$100,000	67% will be used for operations including third party testing and more technical data research. 28% will be used for marketing, including direct sales activities to reach out to small internal combustion engine manufacturers. 5% Wefunder intermediary fee
$300,000	21% will be used for operations including third party testing and more technical data research. 9% will be used for marketing, including direct sales activities to reach out to small internal combustion engine manufacturers. 65% will be used to finish the patent process in the largest manufacturing countries and more testing. 5% Wefunder Intermediary fee
$1,070,000	6% will be used for will be used for operations including third party testing and more technical data research 2% will be used for marketing, including direct sales activities to reach out to small internal combustion engine manufacturers. 19% will be used to finish the patent process in the largest manufacturing countries and more testing. 68% will be used for working capital will help expand the team, office and warehouse space, equipment for testing on more internal combustion engines including motorcycle and auto engines. Also further money towards sales and marketing budget to drive in more revenue. 5% Wefunder Intermediary fee

Capital Structure

CLASS OF SECURITY	SECURITIES (OR AMOUNT) AUTHORIZED	SECURITIES (OR AMOUNT) OUTSTANDING	VOTING RIGHTS
Profit Interest Units	200,000	200,000	Yes
Common Units	800,000	800,000	Yes

Form C Filing on EDGAR

The Securities and Exchange Commission hosts the **official Form C** on their EDGAR web site.

Join **554,482** investors who funded **371** startups with over **$132 million**

View Reg D, A+ and Reg CF Breakdown

Sign up with Facebook

Privacy: We won't share your data, or post to your wall, without your permission.

or

Full name

Email

Password

SIGN UP

Mashable NPR Forbes Bloomberg Businessweek CNNMoney PBS TIME Los Angeles Times

The Boston Globe Inc. TechCrunch THE WALL STREET JOURNAL. FINANCIAL TIMES

wefunder.com/velamotorcompany/about is managed by Wefunder Portal LLC. *Wefunder Inc. runs wefunder.com and is the parent company of Wefunder Advisors LLC and Wefunder Portal LLC. Wefunder Advisors is an exempt reporting adviser that advises SPVs used in Reg D offerings. Wefunder Portal is a funding portal (CRD #283503) that operates sections of wefunder.com where some Regulation Crowdfunding offerings are made. Wefunder, Inc. operates sections of wefunder.com where some Regulation D and A offerings are made. Wefunder, Inc. is not regulated as either a broker-dealer or funding portal and is not a member of FINRA. By using wefunder.com, you accept our Terms & Privacy Policy. If investing, you accept our Investor Agreement. You may also view our Privacy Notice.*

Wefunder, Inc., Wefunder Advisors LLC, and Wefunder Portal LLC do not review user-generated content beyond what's required by US law. Some user-generated content, including investor biographical information, may not be accurate.